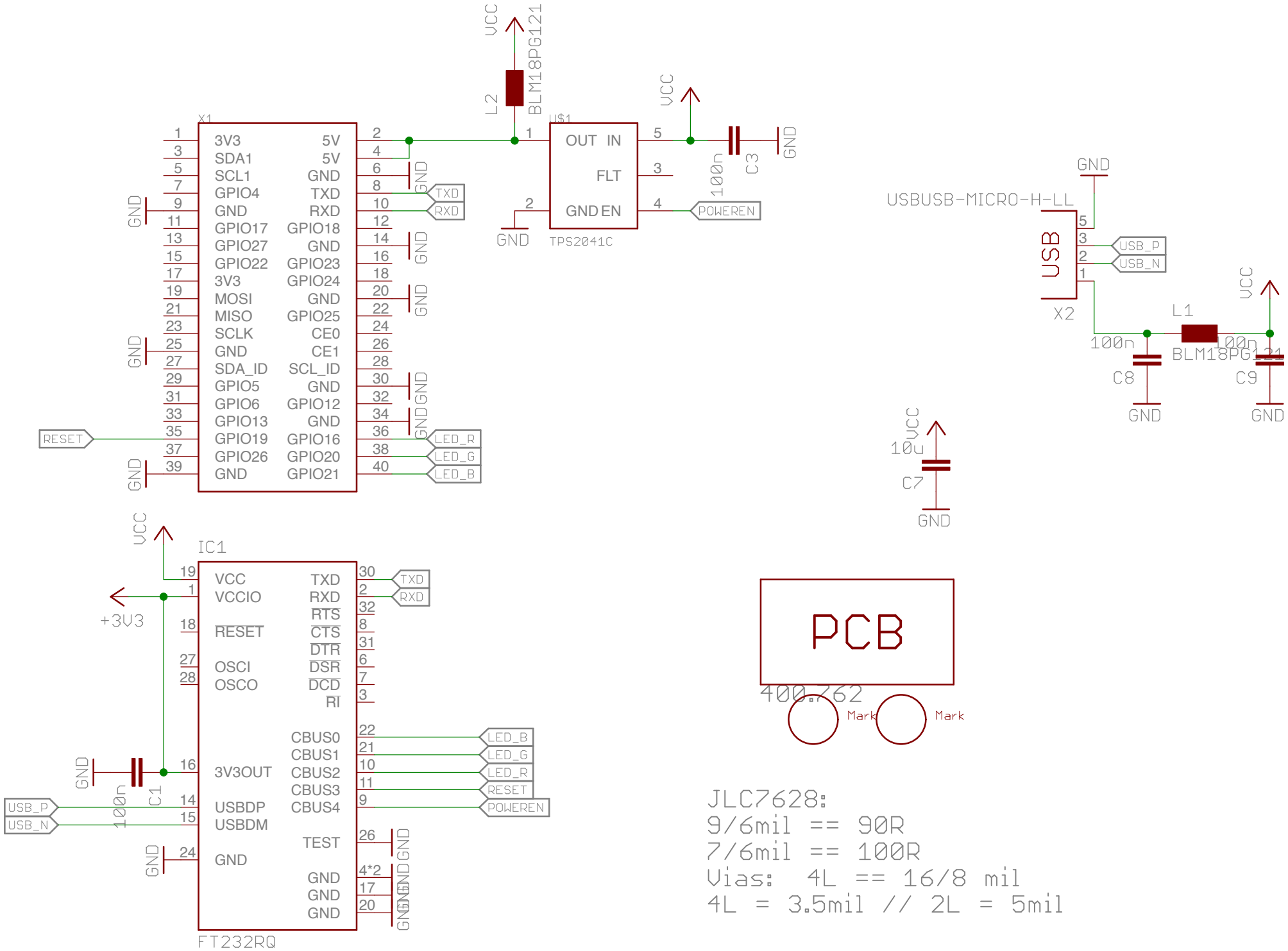
X1
3V3
SDA1
SCL1
GPIO4
GND
GPIO17
GPIO27
GPIO22
3V3
MOSI
MISO
SCLK
GND
SDA_ID
GPIO5
GPIO6
GPIO13
GPIO19
GPIO26
GND
5V
5V
GND
TXD
RXD
GPIO18
GND
GPIO23
GPIO24
GND
GPIO25
CE0
CE1
SCL_ID
GND
GPIO12
GND
GPIO16
GPIO20
GPIO21
RESET
TXD
RXD
LED_R
LED_G
LED_B
VCC
L2
BLM18PG121
U$1
OUT IN
FLT
GND EN
TPS2041C
POWEREN
100n
C3
USBUSB-MICRO-H-LL
USB
X2
USB_P
USB_N
L1
BLM18PG121
100n
C8
C9
10u
C7
IC1
VCC
VCCIO
RESET
OSCI
OSCO
3V3OUT
USBDP
USBDM
GND
TXD
RXD
RTS
CTS
DTR
DSR
DCD
RI
CBUS0
CBUS1
CBUS2
CBUS3
CBUS4
TEST
GND
FT232RQ
+3V3
C1
PCB
400.262
Mark
Mark
JLC7628:
9/6mil == 90R
7/6mil == 100R
Vias: 4L == 16/8 mil
4L = 3.5mil // 2L = 5mil